Part number		R10001NPBXW1
Number of resistor elements		Single-unit
Mounting direction		SMT
Total resistance		500Ω~1000KΩ
Resistance taper		Option
Operating temperature range		-20℃~+70℃
Electrical Characteristics	Total resistance tolerance	☐ ±20% ☐ Other
	Rated power	0.01W
	Max. operating voltage	50V AC,10V DC
	Residual resistance	10Ω max
	Sliding noise	less than 100mV
	Gang error	NONE
	Insulation resistance	50MΩmin,100V DC
	Voltage proof	100V AC for 1minute
	Pressure of switch	30~60mN.m
	Contact resistance of switch	100mΩ max
Mechanical Characteristics	Total rotational angle	270°±5°
	Rotational torque	1~9mN.m
	Stopper strength	0.5N.m
	Vibration	10 to 55 to 10Hz/min., amplitude is 1.5mm for all the frequencies, in X, Y and Z directions and for 2 hours respectively
Durability	Operating life	20,000 cycles
MOQ		1,000PCS

Dimensions

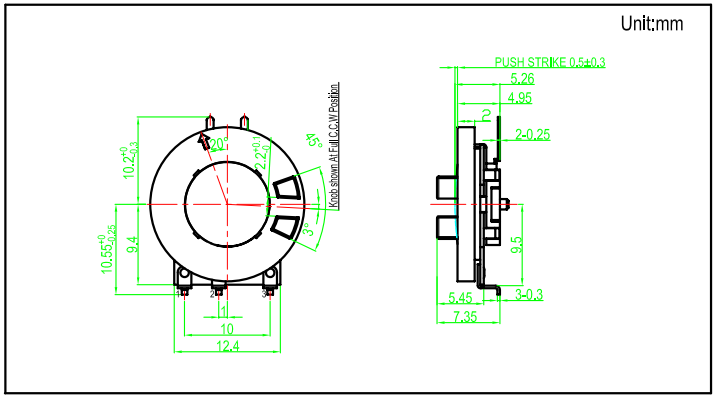

Resistance Taper Options

A Taper	B Taper	C Taper	MN
05 A	1 B	05 C	M
10 A	2 B	10 C	N
15 A	3 B	15 C	
20 A	4 B	20 C	
25 A		25 C	
30 A		30 C	

Mounting Hole Dimensions

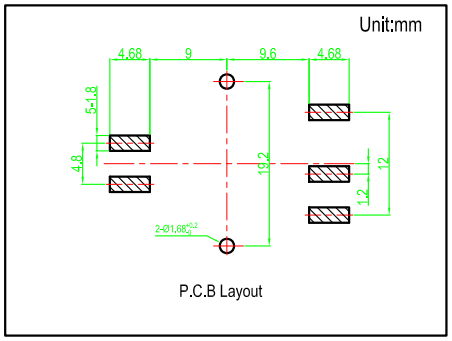
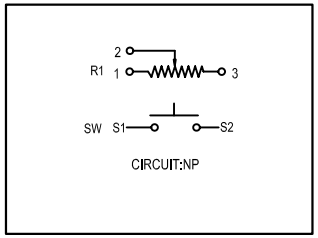
Circuit Diagram